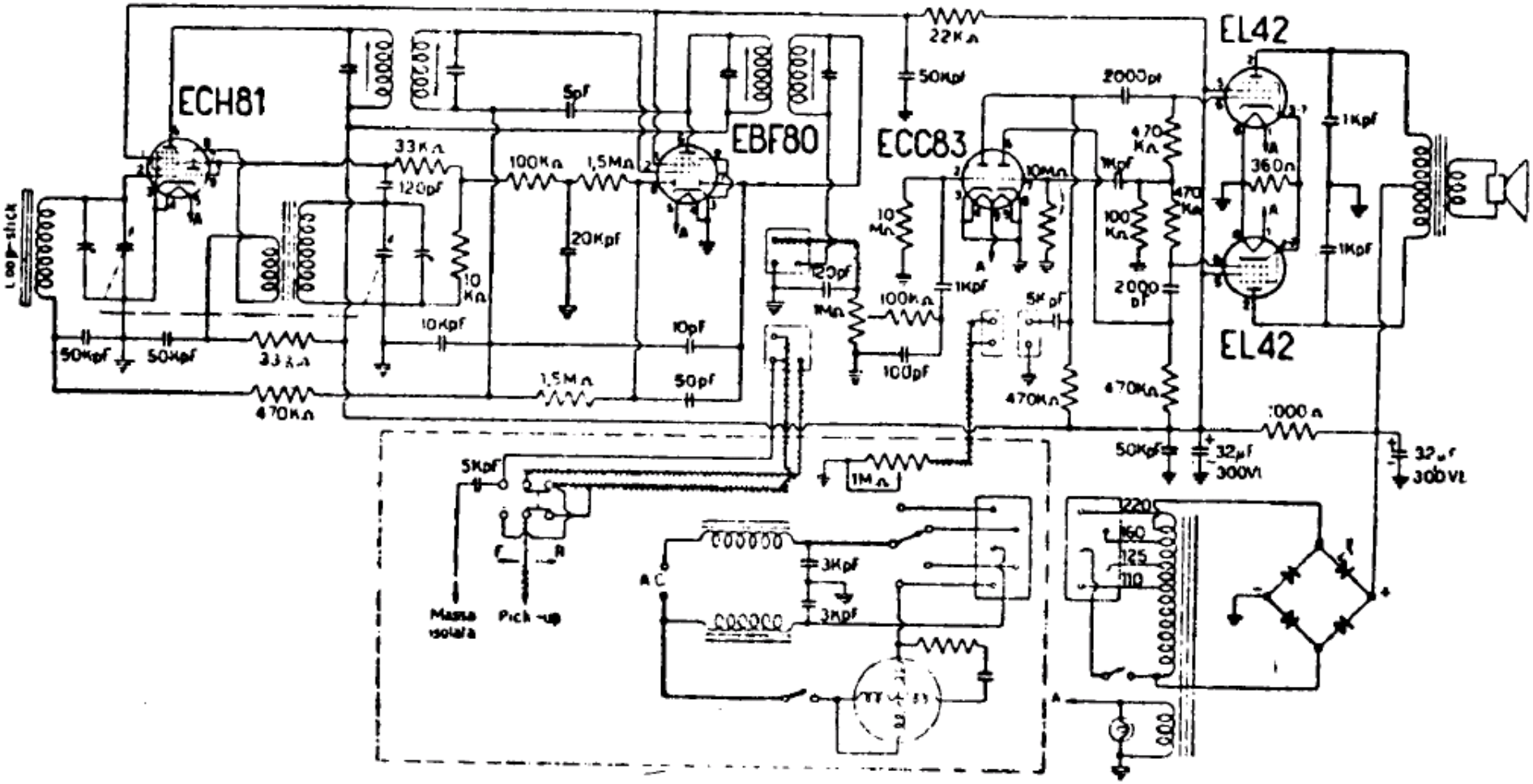EMERSON mod. A 1016